AZRA freestanding bathtub 170x80x58cm, white

Order code: 68631



Size

Length:	1700 mm
Width:	800 mm
Height:	580 mm
Volume:	290 l

Properties

Colour:	White
Material:	Acrylate
Warranty:	2 years

Technical sheet

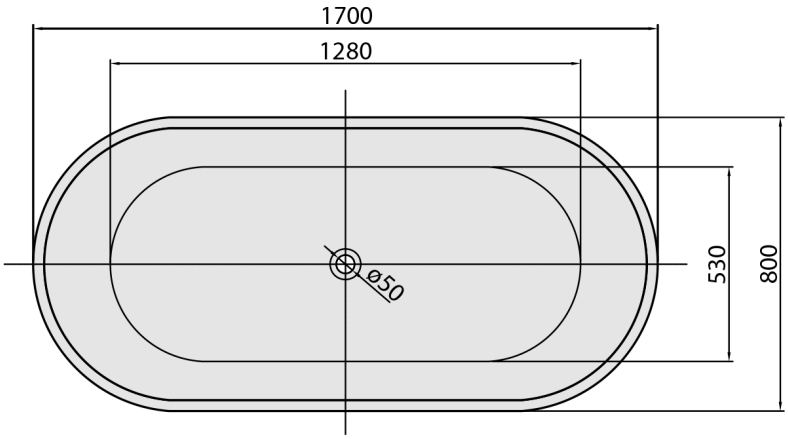

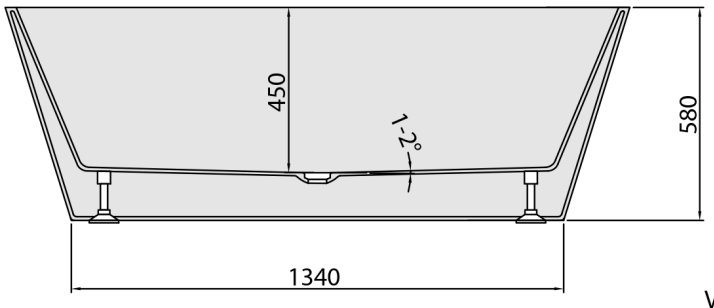

VOLUME 290L